January 1, 2021

NOTICE OF APPROVED BACKFLOW PREVENTION ASSEMBLIES FOR SOUTH CAROLINA

Enclosed is the revised list of approved backflow prevention assemblies and a list of backflow equipment representatives.

The following should be considered before selecting a particular assembly:

1. All local plumbing laws and regulations must be adhered to.

2. Manufacturer's installation instructions shall be strictly adhered to.

3. **Reduced pressure principle assemblies (RPPA) shall be installed so that the relief port will never become submerged or subject to a toxic environment. This prohibits installation in a pit that cannot be drained by gravity to the surface of the ground. Also, RPPA are not acceptable for the vertical orientation unless approved by the University of Southern California's Foundation for Cross Connection Control & Hydraulic Research.**

4. The operating performance of these assemblies varies among manufacturers; therefore, it is suggested that local water authorities be contacted to assist in selecting an assembly which is best suited for that particular system.

5. The South Carolina Department of Health and Environmental Control reserves the right to add or to remove from the approved list any reduced pressure principle assembly, pressure vacuum breaker, or double check valve assembly.

6. It is a requirement that backflow prevention assemblies be tested immediately after installation and at least once a year thereafter. If a serious defect is discovered at the time of the first (immediate inspection after installation) inspection or after any subsequent inspections, it is requested that the Department of Health and Environmental Control be notified so prompt action can be taken to review the approved status of the assembly.

7. **By-pass piping is not permitted unless the by-pass piping is equipped with an approved backflow prevention assembly similar to the main line assembly.** In many instances it will be desirable, or necessary to install two approved backflow prevention assemblies in order that water service will not be interrupted during the testing or repair of the assembly.

S.C. Department of Health and Environmental Control
2600 Bull Street, Columbia, SC 29201 (803) 898-3432 www.scdhec.gov

8. Some manufacturers market, as non-standard equipment, assemblies capable of withstanding elevated temperatures. The high temperature assemblies should be ordered from the manufacturer to include documentation certifying their ability to withstand high temperatures.

9. **Any reduced pressure principle assembly, pressure vacuum breaker, or double Check valve assembly on this list of approved assemblies must be equipped with either resilient seated ball valves or resilient wedged gate valves.** Butterfly valves are acceptable on backflow assemblies as long they are approved by the University of Southern California's Foundation for Cross Connection Control & Hydraulic Research.

10. If a manufacturer markets a prefabricate "manifold" series it will be approved as long as both of the assemblies in the manifold are from the approved list.

11. Manufacturer's now design and sell **type I and type II** double check detector assemblies and reduced pressure detector assemblies for fire sprinkler systems. There is an importance difference between the type I and type II detector assemblies. The type I DCDA or RPDA will have two double check valve assemblies or two reduced pressure principle assemblies. One on the main line and one on the by-pass and both must be tested. There will be a flow indicator (meter) on the by-pass line to detect water usage. The type II DCDA or RPDA will only have one double check valve assembly or reduced pressure principle assembly which will be installed on the main fire line. However, the by-pass line will be installed at or near test cock number 3 where the by-pass line will only have a single check valve installed after the water meter. Both the type I and type II detector assemblies must be assembled by the manufacturer and shipped as a complete unit. Any alterations of this assembly in the field must meet manufacturer's specifications and/or the USCFCCC&HR.

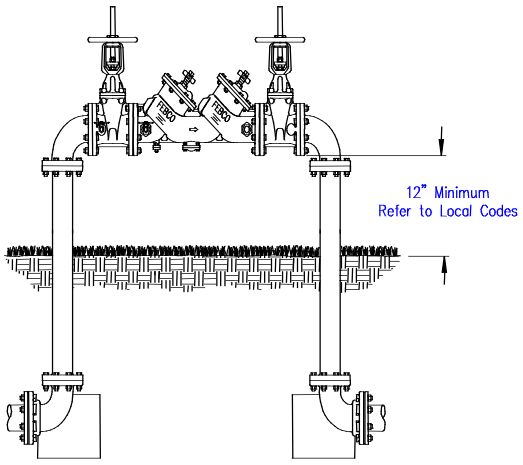

Double Check Assembly
Outdoor Installation –OS&Y Gates

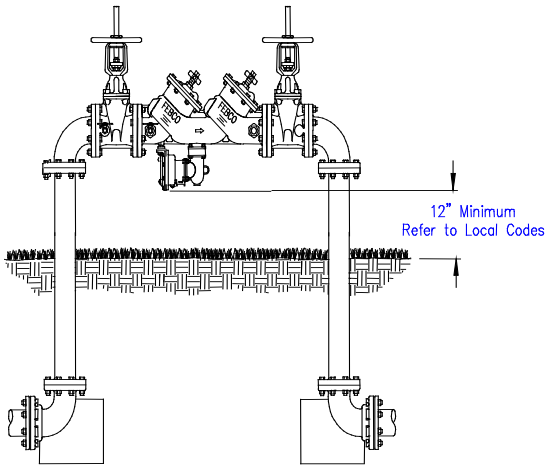

Reduced Pressure Assembly
Outdoor Installation –OS&Y Gates

S.C. Department of Health and Environmental Control
2600 Bull Street, Columbia, SC 29201 (803) 898-3432 www.scdhec.gov

SCDHEC

LIST OF APPROVED BACKFLOW PREVENTION ASSEMBLIES

DOUBLE CHECK VALVE ASSEMBLIES

Manufacturer	Model	Size
Ames	2000-DC	10
Ames	2000-DCA	4
Ames	2000-DCA	6
Ames	2000-DCA	8
Ames	2000-G-DC	10
Ames	2000-G-DCA	4
Ames	2000-G-DCA	6
Ames	2000-G-DCA	8
Ames	2000B	1/2" thru 2"
Ames	2000B-FP	3/4/2021
Ames	2000BM1-FP	1 & 2
Ames	2000BM2-FP	1 1/4 & 1 1/2
Ames	2000BM3	3/4
Ames	2000BM3-FP	3/4
Ames	2000CIV	4 Thru 10
Ames	2000SE	2 1/2, 6, 8
Ames	2000SS	3/4 thru 12
Ames	2000SS-M	4
Ames	2000SS-M	6
Ames	200B	1/2 thru 2
Ames	200B R10	1/2 & 3/4
Ames	200B-A	1/2, 1, 1 1/4, 1 1/2 & 2
Ames	200B-AR10	1/2 & 3/4
Ames	Colt 200	1 1/2 thru 10
Ames	Colt 200a	2 1/2 thru 6
Ames	Colt 200N	2 1/2 thru 10
Ames	Colt 200Na	2 1/2 thru 6
Ames	DC	4 thru 8
Ames	Deringer 20	2 1/2 thru 8
Ames	Deringer 20G	2 1/2 thru 8
Ames	Deringer 20GX	4 & 6
Ames	Deringer 20X	4 & 6
Ames	LF2000B	1/2
Ames	LF2000BM1	1 & 2
Ames	LF2000BM1-FP	1 & 2
Ames	LF2000BM2	1 1/4 & 1 1/2
Ames	LF2000BM2-FP	1 1/4 & 1 1/2
Ames	LF2000BM3	3/4
Ames	LF200B	1/2 thru 2
Apollo/Conbraco	40-109-02	2 1/2

Manufacturer	Model	Size
Ames	LF200B R10	1/2 & 3/4
Ames	LF200B-A	1 thru 2
Ames	LFU200B	1 thru 2
Ames	Maxim 200	2 1/2 thru 10
Ames	Maxim 200a	2 1/2 thru 4
Ames	Maxim 200N	2 1/2 thru 8
Ames	Maxim 200Na	2 1/2 thru 4
Ames	U200B	1 thru 2
Ames	U200BR10	1/2 & 3/4
Apollo/Conbraco	2 1/2DC	2 1/2
Apollo/Conbraco	2 1/2DC-7	2 1/2
Apollo/Conbraco	2 1/2DC8	2 1/2
Apollo/Conbraco	2 1/2DCU	2 1/2
Apollo/Conbraco	3DC	3
Apollo/Conbraco	3DC7	3
Apollo/Conbraco	3DC8	3
Apollo/Conbraco	3DCU	3
Apollo/Conbraco	40-100-02	3
Apollo/Conbraco	40-100-03	3
Apollo/Conbraco	40-100-05	3
Apollo/Conbraco	40-103-02	1/2
Apollo/Conbraco	40-104-02	3/4
Apollo/Conbraco	40-104-A2	3/4
Apollo/Conbraco	40-104-A2T	3/4
Apollo/Conbraco	40-104-T2	3/4
Apollo/Conbraco	40-105-02	1
Apollo/Conbraco	40-105-A2	1
Apollo/Conbraco	40-105-A2T	1
Apollo/Conbraco	40-105-TC2	1
Apollo/Conbraco	40-106-02	1 1/4
Apollo/Conbraco	40-106-99T	1 1/4
Apollo/Conbraco	40-106-A2	1 1/4
Apollo/Conbraco	40-106-A2T	1 1/4
Apollo/Conbraco	40-107-02	1 1/2
Apollo/Conbraco	40-107-A2	1 1/2
Apollo/Conbraco	40-107-A2T	1 1/2
Apollo/Conbraco	40-108-02	2
Apollo/Conbraco	40-108-A2	2
Apollo/Conbraco	40-108-A2T	2
Apollo/Conbraco	DCLF4SG	2 1/2 thru 6

S.C. Department of Health and Environmental Control
2600 Bull Street, Columbia, SC 29201 (803) 898-3432 www.scdhec.gov

DOUBLE CHECK VALVE ASSEMBLIES CONT.

Manufacturer	Model	Size
Apollo/Conbraco	40-109-03	2 1/2
Apollo/Conbraco	40-109-05	2 1/2
Apollo/Conbraco	40-10A-02	4
Apollo/Conbraco	40-10A-03	4
Apollo/Conbraco	40-10A-05	4
Apollo/Conbraco	40-10A-06	4
Apollo/Conbraco	40-10C-02	6
Apollo/Conbraco	40-10C-03	6
Apollo/Conbraco	40-10C-05	6
Apollo/Conbraco	40-10C-06	6
Apollo/Conbraco	40-10E-02	8
Apollo/Conbraco	40-10E-03	8
Apollo/Conbraco	40-10E-06	8
Apollo/Conbraco	40-10G-02	10
Apollo/Conbraco	40-10G-03	10
Apollo/Conbraco	40-10G-06	10
Apollo/Conbraco	4D-100	2.5 thru 4
Apollo/Conbraco	4D-100U	2.5 thru 4
Apollo/Conbraco	4DC	4
Apollo/Conbraco	4DC7	4
Apollo/Conbraco	4DC8	4
Apollo/Conbraco	4DCU	4
Apollo/Conbraco	6DC	6
Apollo/Conbraco	6DC7	6
Apollo/Conbraco	6DC8	6
Apollo/Conbraco	6DCU	6
Apollo/Conbraco	8DC	8
Apollo/Conbraco	8DC8	8
Apollo/Conbraco	DC40	3/4 thru 2
Apollo/Conbraco	DC4AY	3/4 & 1
Apollo/Conbraco	DC4S	1/2
Apollo/Conbraco	DC4S	10
Apollo/Conbraco	DC4SG	2 1/2 thru 8
Apollo/Conbraco	DC4SGN	2 1/2 thru 8
Apollo/Conbraco	DCLF4A	1/2 thru 8
Apollo/Conbraco	DCLF4AN	2 1/2 thru 8
Apollo/Conbraco	DCLF4AR	2 1/2 thru 8
Apollo/Conbraco	DCLF4AY	3/4 & 1
Febco	LF870W	4 thru 10
Febco	LF870WZ	4 thru 10
Watts	700	2 1/2 & 3
Watts	709	2 1/2 thru 10
Watts	757	2 1/2 thru 10
Watts	767	2 1/2 thru 10
Watts	770	8
Watts	772	4 & 10
Watts	774	8 thru 12
Watts	007	2 1/2 & 3
Watts	007M1-FP	1 & 2
Watts	007M1PCQT	3/4, 1, 1 1/2, 2

Manufacturer	Model	Size
Apollo/Conbraco	W432100	1/2
ARI	DC 500	1/2 thru 2
ARI	DC 501	1/2 thru 2
Backflow Direct	Deringer 20	2 1/2 thru 8
Backflow Direct	Deringer 20G	2 1/2 thru 8
Backflow Direct	Deringer 20GX	4 & 6
Backflow Direct	Deringer 20X	4 & 6
Backflow Direct	Magnum 20	2 1/2, 3, 4, 8
Backflow Direct	Magnum 20G	2 1/2 thru 8
Backflow Direct	Magnum 20GX	6
Backflow Direct	Magnum 20X	6
BEECO	Barracuda 20	2 1/2, 3, 4, 8
BEECO	Barracuda 20X	6
BEECO	FDC	2 1/2 thru 6
BEECO	FDC	2 1/2
BEECO	FDC	3
BEECO	FDC	3
BEECO	FDC	4
BEECO	FDC	4
BEECO	FDC	6
BEECO	FDC	6
Cla-Val	D4	8
Cla-Val	D4	10
Febco	850	1/2 thru 8
Febco	857	2 1/2 & 3
Febco	870	2 1/2
Febco	870	3 thru 10
Febco	805Y	3/4, 1, 1 1/2, 2
Febco	805YB	3/4
Febco	805YD	2 1/2 thru 10
Febco	805YR	3/4 & 1
Febco	850F	3/4
Febco	850U	1/2 thru 2
Febco	870V	2 1/2 thru 10
Febco	LF850	1/2
Febco	LF850	1/2 thru 10
Febco	LF850U	1/2 thru 2
Febco	LF870V	2 1/2 thru 10
Watts	770	4
Watts	770QTFDA	4
Watts	770QTFDA	8
Watts	774	2 1/2 thru 6
Watts	774X	2 1/2, 6, 8
Watts	775QT	1/2 thru 2
Watts	LF007	2 1/2 & 3
Watts	LF007M1PCQT	1 & 2
Watts	LF007M1QT	1 & 2
Watts	LF007M2QT	1 1/4 & 1 1/2
Watts	LF007M3PCQT	3/4
Watts	LF007M3QT	3/4

S.C. Department of Health and Environmental Control
2600 Bull Street, Columbia, SC 29201 (803) 898-3432 www.scdhec.gov

DOUBLE CHECK VALVE ASSEMBLIES CONT.

Manufacturer	Model	Size
Watts	007M1QT	3/4, 1, 1 1/2, 2
Watts	007M2-FP	1 1/4 & 1 1/2
Watts	007M2PCQT	1 1/4 & 1 1/2
Watts	007M2QT	3/4, 1 1/4, 1 1/2
Watts	007M3-FP	3/4
Watts	007M3QT	3/4
Watts	007PCQT	1/2
Watts	007PCQT	1 1/2 & 2
Watts	007QT	1/2, 3/4, 1, 1 1/2, 2
Watts	007SSM1PCQT	3/4 & 1
Watts	007SSM1QT	3/4 & 1
Watts	007SSPCQT	1 1/2 & 2
Watts	007SSQT	3/4, 1, 1 1/2, 2
Watts	709BB	2 1/2 & 3
Watts	709QT	3/4, 1, 1 1/2, 2
Watts	719AQT	1/2, 1, 1 1/4, 1 1/2, 2
Watts	719AQTR10	1/2 & 3/4
Watts	719QT	1/2 thru 2
Watts	719QTR10	1/2 & 3/4
Watts	757a	2 1/2 thru 6
Watts	757N	2 1/2 thru 10
Watts	757Na	2 1/2 thru 6
Watts	757NQT	2 1/2, 3, 4
Watts	757QT	2 1/2, 3, 4
Watts	767a	2 1/2, 3, 4
Watts	767N	2 1/2 thru 8
Watts	767Na	2 1/2, 3, 4
Wilkins	950	3/4 thru 10
Wilkins	350A	2 1/2 thru 10
Wilkins	350AR	2 1/2 thru 10
Wilkins	350ARXL	2 1/2 thru 10
Wilkins	350AST	2 1/2 thru 10
Wilkins	350ASTR	2 1/2 thru 10
Wilkins	350AXL	2 1/2 thru 10
Wilkins	350D	3/4
Wilkins	350XL	3/4 thru 12
Wilkins	450ST	4 thru 10
Wilkins	450STR	4 thru 10
Wilkins	450XL	2 1/2 thru 10
Wilkins	550	2 1/2
Wilkins	550A	3/4 & 1

Manufacturer	Model	Size
Watts	LF007PCQT	1/2
Watts	LF007QT	1/2
Watts	LF709	2 1/2 thru 10
Watts	LF719AQT	1 thru 2
Watts	LF719QT	1/2 thru 2
Watts	LF719QTR10	1/2 & 3/4
Watts	LFU719QT	1 thru 2
Watts	Magnum 20	2 1/2 thru 8
Watts	Magnum 20G	2 1/2 thru 8
Watts	SS007M1QT	1
Watts	SS007M3QT	1/2 & 3/4
Watts	U007M1APCQT	3/4 & 2
Watts	U007M1AQT	3/4 & 2
Watts	U007M1PCQT	3/4, 1, 1 1/2, 2
Watts	U007M1QT	3/4, 1, 1 1/2, 2
Watts	U007M2AQT	1 1/2
Watts	U007M2QT	1 1/4 & 1 1/2
Watts	U007PCQT	3/4, 1, 1 1/2, 2
Wilkins	550M	8 & 10
Wilkins	950A	3/4 thru 2
Wilkins	950XL	3/4
Wilkins	950XL	3/4 thru 2
Wilkins	950XLD	3/4
Wilkins	950XLDTCU	3/4
Wilkins	950XLT	3/4 thru 2
Wilkins	950XLT2	3/4 thru 2
Wilkins	950XLT2U	3/4
Wilkins	950XLTBF	2
Wilkins	950XLTBFSS	2
Wilkins	950XLTU	3/4 & 1
Wilkins	950XLU	3/4, 1, 1 1/2, 2
Watts	U007QT	1/2, 3/4, 1, 1 1/2, 2
Watts	U007SSPCQT	3/4, 1, 1 1/2, 2
Watts	U007SSQT	3/4, 1, 1 1/2, 2
Watts	U719QT	1 thru 2
Watts	U719QTR10	1/2 & 3/4
Wilkins	350	3/4 thru 12
Wilkins	450	2 1/2 thru 10
Wilkins	550	3/4
Wilkins	550	1 thru 6

S.C. Department of Health and Environmental Control
2600 Bull Street, Columbia, SC 29201 (803) 898-3432 www.scdhec.gov

Type I - Double Check Detector Assemblies & Reduced Pressure Detector Assemblies

The following assemblies are **Type I** Double Check DETECTOR Assemblies and Reduced Pressure DETECTOR Assemblies. These assemblies are made up from DCVA's and RPPA's which are approved elsewhere on this list. These assemblies are designed for FIRE LINE SPRINKLER use. If a Double Check Detector Assembly or Reduced Pressure Detector Assembly is prescribed, it should be done with an understanding that the meter on the by-pass line should be read periodically in order to be of any value. Don't forget that when the annual testing is done, both assemblies are required to be tested (Ex: Mainline Assem. and by-pass Assem.). This type I detector assembly must be assembled by the manufacturer and shipped as a complete unit. Any alterations of this assembly in the field must meet manufacturer's specifications and/or the USCFCCC&HR.

TYPE I - DOUBLE CHECK DETECTOR ASSEMBLIES:

Manufacturer	Model	Size
Ames	3000-1SS	12
Ames	3000B	2
Ames	3000B-FP	2
Ames	3000BM1	2
Ames	3000CIV	4 thru 10
Ames	3000DCDA	4 thru 8
Ames	3000DCDC	10
Ames	3000GDCDA	4 thru 8
Ames	3000GDCDC	10
Ames	3000SE	2 1/2, 6, 8
Ames	3000SEA	8
Ames	3000SEWM1	6
Ames	3000SS	2 1/2 thru 12
Ames	3000SSA	6
Ames	3000SSM	4 & 6
Ames	3000SSWM1	2 1/2 thru 4
Ames	Colt 300aBF	2 1/2 thru 6
Ames	Colt 300aGV	2 1/2 thru 6
Ames	Colt 300BF	2 1/2 thru 10
Ames	Colt 300GV	2 1/2 thru 10
Ames	Colt 300NBF	2 1/2 thru 10
Ames	Colt 300NGV	2 1/2 thru 10
Ames	DCDC	4 thru 8
Ames	LFColt 300BF	2 1/2 thru 10
Ames	LFColt 300GV	2 1/2 thru 10
Ames	LFColt 300NBF	2 1/2 thru 10
Ames	LFColt 300NGV	2 1/2 thru 10
Ames	LFMaxim 300BF	2 1/2 thru 10
Ames	LFMaxim 300GV	2 1/2 thru 10

Manufacturer	Model	Size
Apollo/Conbraco	4060CC6	6
Apollo/Conbraco	4060CE3	6
Apollo/Conbraco	4060CE6	6
Apollo/Conbraco	4060EC3	8
Apollo/Conbraco	4060EC6	8
Apollo/Conbraco	4060EE3	8
Apollo/Conbraco	4060EE6	8
Apollo/Conbraco	4060GC3	10
Apollo/Conbraco	4060GC6	10
Apollo/Conbraco	4060GE3	10
Apollo/Conbraco	4060GE6	10
Apollo/Conbraco	4DCDA	4
Apollo/Conbraco	4DCDA6	4
Apollo/Conbraco	4DCDA7	4
Apollo/Conbraco	4DCDA8	4
Apollo/Conbraco	4DCDAU	4
Apollo/Conbraco	6DCDA	6
Apollo/Conbraco	6DCDA6	6
Apollo/Conbraco	6DCDA7	6
Apollo/Conbraco	6DCDA8	6
Apollo/Conbraco	6DCDAU	6
Apollo/Conbraco	8DCDA	8
Apollo/Conbraco	8DCDA7	8
Apollo/Conbraco	8DCDA8	8
Apollo/Conbraco	DCDA4S	10
Apollo/Conbraco	DCDA4SG	2 1/2 thru 8
Apollo/Conbraco	DCDA4SGN	2 1/2 thru 8
Apollo/Conbraco	DCDALF4A	2 1/2 thru 8
Apollo/Conbraco	DCDALF4AN	2 1/2 thru 8

S.C. Department of Health and Environmental Control
2600 Bull Street, Columbia, SC 29201 (803) 898-3432 www.scdhec.gov

TYPE I - DOUBLE CHECK DETECTOR ASSEMBLIES CONT.

Manufacturer	Model	Size
Ames	LFMaxim 300NBF	2 1/2 thru 10
Ames	LFMaxim 300NGV	2 1/2 thru 10
Ames	Maxim 300aBF	2 1/2, 3, 4
Ames	Maxim 300aGV	2 1/2, 3, 4
Ames	Maxim 300BF	2 1/2 thru 10
Ames	Maxim 300GV	2 1/2 thru 10
Ames	Maxim 300NBF	2 1/2 thru 10
Ames	Maxim 300NGV	2 1/2 thru 10
Apollo/Conbraco	40600000	3
Apollo/Conbraco	2 1/2DCDA	2 1/2
Apollo/Conbraco	2 1/2DCDA6	2 1/2
Apollo/Conbraco	2 1/2DCDA7	2 1/2
Apollo/Conbraco	2 1/2DCDA8	2 1/2
Apollo/Conbraco	2 1/2DCDAU	2 1/2
Apollo/Conbraco	3DCDA	3
Apollo/Conbraco	3DCDA6	3
Apollo/Conbraco	3DCDA7	3
Apollo/Conbraco	3DCDA8	3
Apollo/Conbraco	3DCDAU	3
Apollo/Conbraco	40600C3	3
Apollo/Conbraco	4060AC3	4
Apollo/Conbraco	4060AC6	4
Apollo/Conbraco	4060AE3	4
Apollo/Conbraco	4060AE6	4
Apollo/Conbraco	4060CC3	6
Watts	770DCDA	4 & 8
Watts	772DCDA	4 & 10
Watts	774DCDA	2 1/2 thru 12
Watts	774DCDA-1	12
Watts	774XDCDA	2 1/2, 6, 8
Watts	LF757DCDABF	2 1/2 thru 10
Watts	LF757DCDAGV	2 1/2 thru 10
Watts	LF757NDCDABF	2 1/2 thru 10
Watts	LF757NDCDAGV	2 1/2 thru 10
Wilkins	350ADA	2 1/2 thru 10
Wilkins	350ADAR	2 1/2 thru 10

Manufacturer	Model	Size
Apollo/Conbraco	DCDALF4AP	8
Apollo/Conbraco	DCDALF4AR	2 1/2 thru 8
Febco	856	2 1/2 thru 8
Febco	858	2, 2 1/2, 3
Febco	876	2 1/2 thru 10
Febco	806YD	3 thru 10
Febco	856ST	2 1/2 thru 10
Febco	876V	2 1/2 thru 10
Febco	876VST	2 1/2 thru 8
Watts	007DCDA	2, 2 1/2, 3
Watts	007DCDA-FP	2
Watts	007M1DCDA	2
Watts	709DCDA	3 thru 10
Watts	757aDCDABF	2 1/2 thru 6
Watts	757aDCDAGV	2 1/2 thru 6
Watts	757DCDABF	2 1/2 thru 10
Watts	757DCDAGV	2 1/2 thru 10
Watts	757NDCDABF	2 1/2 thru 10
Watts	757NDCDAGV	2 1/2 thru 10
Watts	767aDCDABF	2 1/2, 3, 4
Watts	767aDCDAGV	2 1/2, 3, 4
Watts	767DCDABF	2 1/2 thru 10
Watts	767DCDAGV	2 1/2 thru 10
Watts	767NDCDABF	2 1/2 thru 10
Watts	767NDCDAGV	2 1/2 thru 10
Wilkins	350ASTDA	2 1/2 thru 10
Wilkins	350ASTDAR	2 1/2 thru 10
Wilkins	350DA	2 1/2 thru 12
Wilkins	450DA	4 thru 10
Wilkins	450STDA	4 thru 10
Wilkins	450STDAR	4 thru 10
Wilkins	950DA	2 1/2 thru 10
Wilkins	950XLTDA	2
Wilkins	950XLTDABF	2
Wilkins	DCDA	2 1/2 thru 6

S.C. Department of Health and Environmental Control
2600 Bull Street, Columbia, SC 29201 (803) 898-3432 www.scdhec.gov

TYPE I - REDUCED PRESSURE DETECTOR ASSEMBLIES:

Manufacturer	Model	Size
Ames	5000	4 thru 10
Ames	5000CIV	2 1/2 thru 10
Ames	Colt 500-GV	2 1/2 thru 10
Ames	Colt 500NBF	2 1/2, 3, 4, 8
Ames	Colt 500NGV	2 1/2 thru 8
Ames	Colt 500ZBF	2 1/2, 3, 4, 8
Ames	Colt 500ZGV	2 1/2, 3, 4, 8
Ames	LFColt 500-GV	2 1/2 thru 6
Ames	LFColt 500GV	2 1/2 thru 10
Ames	LFColt 500NBF	2 1/2 thru 4
Ames	LFColt 500NGV	2 1/2 thru 4
Ames	LFColt 500ZBF	2 1/2 thru 4
Ames	LFColt 500ZGV	2 1/2 thru 4
Ames	LFMaxim 500GV	2 1/2 thru 10
Ames	LFMaxim 500NBF	2 1/2 & 3
Ames	LFMaxim 500NGV	2 1/2 & 3
Ames	LFMaxim 500ZBF	2 1/2 & 3
Ames	LFMaxim 500ZGV	2 1/2 & 3
Ames	Maxim 500-GV	2 1/2 thru 10
Ames	Maxim 500NBF	2 1/2 thru 6
Ames	Maxim 500NGV	2 1/2 thru 6
Ames	Maxim 500ZBF	2 1/2, 3, 6
Ames	Maxim 500ZGV	2 1/2, 3, 6
Apollo/Conbraco	RPDALF4A	2 1/2 thru 8
Apollo/Conbraco	RPDALF4AN	2 1/2 thru 8
Apollo/Conbraco	RPDALF4AR	2 1/2 thru 8
Cla-Val	18-4	10
Febco	826YD	2 1/2 thru 10

Manufacturer	Model	Size
Watts	909RPDA	2 1/2 thru 10
Watts	957NRPDA-BF	2 1/2, 3, 4, 8
Watts	957NRPDA-GV	2 1/2 thru 8
Watts	957RPDA-GV	2 1/2 thru 10
Watts	957ZRPDA-BF	2 1/2, 3, 4, 8
Watts	957ZRPDA-GV	2 1/2, 3, 4, 8
Watts	967NRPDA-BF	2 1/2 thru 6
Watts	967NRPDA-GV	2 1/2 thru 6
Watts	967RPDA-GV	2 1/2 thru 10
Watts	967ZRPDA-BF	2 1/2, 3, 6
Watts	967ZRPDA-GV	2 1/2, 3, 6
Watts	990RPDA	4 & 8
Watts	992RPDA	4 & 10
Watts	LF957NRPDA-BF	2 1/2 thru 4
Watts	LF957NRPDA-GV	2 1/2 thru 4
Watts	LF957RPDA-GV	2 1/2 thru 10
Watts	LF957ZRPDA-BF	2 1/2 thru 4
Watts	LF957ZRPDA-GV	2 1/2 thru 4
Wilkins	375ADA	2 1/2 thru 10
Wilkins	375ADAR	2 1/2 thru 10
Wilkins	375ASTDA	2 1/2 thru 10
Wilkins	375ASTDAR	2 1/2 thru 10
Wilkins	375DA	2 1/2 thru 10
Wilkins	475DA	4, 6, 8
Wilkins	475DAV	4, 6, 8
Wilkins	475STDA	4, 6, 8
Wilkins	475STDAR	4 thru 10
Wilkins	975DA	2 1/2 thru 10

S.C. Department of Health and Environmental Control
2600 Bull Street, Columbia, SC 29201 (803) 898-3432 www.scdhec.gov

Type II – Double Check Detector Assemblies & Reduced Pressure Detector Assemblies

The following assemblies are **Type II** Double Check DETECTOR Assemblies and Reduced Pressure DETECTOR Assemblies. These assemblies are designed for FIRE LINE SPRINKLER use. The type II DCDA or RPDA will only have one double check valve assembly or reduced pressure principle assembly which will be installed on the main fire line. However, the by-pass line will be installed at or near test cock number 3 where the by-pass line will only have a single check valve installed after the water meter. If a Double Check Detector Assembly or Reduced Pressure Detector Assembly is prescribed, it should be done with an understanding that the meter on the by-pass line should be read periodically in order to be of any value. Don't forget that when the annual testing is done, the main line backflow assembly and the single check on the by-pass line should both be tested. This type II detector assembly must be assembled by the manufacturer and shipped as a complete unit. Any alterations of this assembly in the field must meet manufacturer's specifications and/or the USCFCCC&HR.

TYPE II - DOUBLE CHECK DETECTOR ASSEMBLIES AND
TYPE II - REDUCED PRESSURE DETECTOR ASSEMBLIES:

Manufacturer	Model	Size
Ames	Deringer 30	2 1/2 thru 8
Ames	Deringer 30G	2 1/2 thru 8
Ames	Deringer 30GX	4 & 6
Ames	Deringer 30X	4 & 6
Apollo/Conbraco	DCDA24A	1 1/2 & 2
Apollo/Conbraco	DCDA2LF4A	1 1/2 thru 8
Apollo/Conbraco	DCDA2LF4AR	2 1/2 thru 8
Backflow Direct	Deringer 30	2 1/2 thru 8
Backflow Direct	Deringer 30G	2 1/2 thru 8
Backflow Direct	Deringer 30GX	4 & 6
Backflow Direct	Deringer 30X	4 & 6
Febco	LF856	2 1/2 thru 10
Febco	LF876V	2 1/2 thru 10
Febco	LF876W	4 thru 10
Febco	LF876WZ	4 thru 10

Manufacturer	Model	Size
Ames	Deringer 50	2 1/2, 3, 4, 8
Ames	Deringer 50G	2 1/2, 3, 4, 8
Ames	Deringer 50GX	6
Ames	Deringer 50X	6
Apollo/Conbraco	RPDA24A	1 1/2 & 2
Apollo/Conbraco	RPDA2LF4A	1 1/2 & 2
Apollo/Conbraco	RPDA2LF4A	2 1/2 thru 8
Apollo/Conbraco	RPDA2LF4AR	2 1/2 thru 8
Backflow Direct	Deringer 50	2 1/2, 3, 4, 8
Backflow Direct	Deringer 50G	2 1/2, 3, 4, 8
Backflow Direct	Deringer 50GX	6
Backflow Direct	Deringer 50X	6
Febco	LF866	2 1/2 thru 10
Febco	LF886V	2 1/2 thru 10
Febco	LF886W	4 thru 10
Febco	LF886WZ	4 thru 10

S.C. Department of Health and Environmental Control
2600 Bull Street, Columbia, SC 29201 (803) 898-3432 www.scdhec.gov

SCDHEC

LIST OF APPROVED BACKFLOW PREVENTION ASSEMBLIES

REDUCED PRESSURE PRINCIPLE ASSEMBLIES

Approved for use to protect the potable water system from backflow when there is an actual or potential health hazard. The terms "health hazard" shall mean an actual or potential threat of contamination or pollution of a physical or toxic nature to the public potable water system or the consumer's potable water system to such a degree of intensity that there would be a danger to health.

Manufacturer	Model	Size
Ames	4000B	1/2 thru 2
Ames	4000B-FP	3/4 thru 2
Ames	4000BM2	1
Ames	4000BM2-FP	1 thru 2
Ames	4000BM3	3/4
Ames	4000BM3-FP	3/4
Ames	4000CIV	2 1/2 thru 10
Ames	4000RP	4 thru 10
Ames	4000SS	2 1/2 thru 6
Ames	400B	3/4 thru 2
Ames	400B-A	3/4 thru 2
Ames	400B-Z	3/4 thru 2
Ames	Colt 400	2 1/2 thru 10
Ames	Colt 400BF	4 & 6
Ames	Colt 400N	2 1/2 thru 8
Ames	Colt 400Z	2 1/2 thru 8
Ames	Deringer 40	2 1/2, 3, 4, 8
Ames	Deringer 40G	2 1/2, 3, 4, 8
Ames	Deringer 40GX	6
Ames	Deringer 40X	6
Ames	LF4000B	1/2
Ames	LF4000BM2	1 thru 2
Ames	LF4000BM2-FP	1 thru 2
Ames	LF4000BM3	3/4
Ames	Maxim 400	2 1/2 thru 10
Ames	Maxim 400N	2 1/2 thru 6
Ames	Maxim 400Z	2 1/2 thru 6
Ames	U400B	1 thru 2
Ames	U400B-A	3/4 thru 2
Apollo/Conbraco	4020102	1/4
Apollo/Conbraco	4020202	3/8
Apollo/Conbraco	4020302	1/2
Apollo/Conbraco	4020402	3/4
Apollo/Conbraco	4020502	1
Apollo/Conbraco	4020602	1 1/4
Apollo/Conbraco	4020702	1 1/2
Apollo/Conbraco	4020802	2

Manufacturer	Model	Size
Apollo/Conbraco	RP40	1/4 thru 10
Apollo/Conbraco	RP40N	3/4 & 1 1/4
Apollo/Conbraco	RP40U	1 1/2 & 2
Apollo/Conbraco	RP40Z	3/4 thru 2
Apollo/Conbraco	RP4A	1/2 thru 2
Apollo/Conbraco	RP4AN	3/4 & 1
Apollo/Conbraco	RPLF40	1/2, 1 1/4, 1 1/2, 2
Apollo/Conbraco	RPLF4A	1/2 thru 8
Apollo/Conbraco	RPLF4AN	3/4 thru 8
Apollo/Conbraco	RPLF4AR	2 1/2 thru 8
Apollo/Conbraco	RPS40	1/4 thru 1
ARI	RP 500	1/2 thru 2
ARI	RP 501	1/2 thru 2
Backflow Direct	Deringer 40	2 1/2, 3, 4, 8
Backflow Direct	Deringer 40G	2 1/2, 3, 4, 8
Backflow Direct	Deringer 40GX	6
Backflow Direct	Deringer 40X	6
Backflow Direct	Magnum 40	2 1/2, 3, 4, 8
Backflow Direct	Magnum 40G	2 1/2, 3, 4, 8
Backflow Direct	Magnum 40GX	6
Backflow Direct	Magnum 40X	6
BEECO	Barracuda 40	2 1/2, 3, 4, 8
BEECO	Barracuda 40X	6
Cla-Val	RP4	8 & 10
Febco	860	1/2 thru 8
Febco	867	2 1/2 & 3
Febco	880	2 1/2 thru 10
Febco	825Y	3/4 thru 2
Febco	825YA	3/4 thru 2
Febco	825YAR	3/4 thru 2
Febco	825YD	2 1/2 thru 10
Febco	825YR	3/4, 1, 1 1/2, 2
Febco	860U	1/2 thru 2
Febco	880V	2 1/2 thru 10
Febco	LF825Y	3/4, 1, 1 1/2, 2
Febco	LF825YA	3/4 thru 2
Febco	LF860	1/2 thru 10

S.C. Department of Health and Environmental Control
2600 Bull Street, Columbia, SC 29201 (803) 898-3432 www.scdhec.gov

REDUCED PRESSURE PRINCIPLE ASSEMBLIES CONT.

Manufacturer	Model	Size
Apollo/Conbraco	40201A2	1/4
Apollo/Conbraco	40202A2	3/8
Apollo/Conbraco	4020399T	1/2
Apollo/Conbraco	40203A2	1/2
Apollo/Conbraco	40204A2	3/4
Apollo/Conbraco	40204TCU	3/4
Apollo/Conbraco	40205A2	1
Apollo/Conbraco	40205T2U	1
Apollo/Conbraco	40205T2Z	1
Apollo/Conbraco	40205TC2	1
Apollo/Conbraco	40205TCU	1
Apollo/Conbraco	40206A2	1 1/4
Apollo/Conbraco	40207A2	1 1/2
Apollo/Conbraco	40208A2	2
Apollo/Conbraco	40208A4	2
Apollo/Conbraco	4D-200	2 1/2, 3, 4
Apollo/Conbraco	4D-200U	2 1/2, 3, 4
Watts	009M3QT	3/4
Watts	009PCQT	1/2 thru 2
Watts	009QT	1/4 thru 2
Watts	009SSM1PCQT	2
Watts	009SSM1QT	2
Watts	009SSPCQT	3/4 thru 2
Watts	009SSQT	3/4 thru 2
Watts	909BB	2 1/2 & 3
Watts	909HWQT	3/4 & 1
Watts	909M1	8 & 10
Watts	909M1HWQT	1 1/4 thru 2
Watts	909M1PCHWQT	1 1/4 thru 2
Watts	909M1QT	1 1/4 thru 2
Watts	909PCHWQT	3/4 & 1
Watts	909PCM1QT	1 1/4 thru 2
Watts	909PCQT	3/4 & 1
Watts	909QT	3/4 & 1
Watts	919AQT	3/4 thru 2
Watts	919QT	3/4 thru 2
Watts	919ZQT	3/4 thru 2
Watts	957 BF	4 & 6
Watts	957N	2 1/2 thru 8
Watts	957NQT	2 1/2 thru 4
Watts	957NQT	3 & 4
Watts	957QT	2 1/2 thru 4
Watts	957Z	2 1/2, 3, 4, 8
Watts	957ZQT	2 1/2 thru 4
Watts	967N	2 1/2 thru 6
Watts	967Z	2 1/2, 3, 6
Watts	990QTFDA	4 & 8
Watts	995QT	1/2 thru 1 1/2
Watts	FAE909HWQT	1 1/4 thru 2
Watts	FAE909QT	1 1/4 thru 2
Watts	LF009	2 1/2 & 3

Manufacturer	Model	Size
Febco	LF860U	1/2 thru 2
Febco	LF880V	2 1/2 thru 10
Febco	LF880W	4 thru 10
Febco	LF880WZ	4 thru 10
Watts	909	2 1/2 thru 10
Watts	957	2 1/2 thru 10
Watts	967	2 1/2 thru 10
Watts	990	4 & 8
Watts	992	4 & 10
Watts	994	2 1/2 thru 6
Watts	009	2 1/2 & 3
Watts	009M1PCQT	1 1/4, 1 1/2 & 2
Watts	009M1QT	1 1/4, 1 1/2 & 2
Watts	009M2-FP	1 thru 2
Watts	009M2PCQT	3/4 thru 2
Watts	009M2QT	3/4 thru 2
Watts	009M3-FP	3/4
Watts	Magnum 40X	6
Watts	SS009M3QT	1/4 thru 3/4
Watts	SS009QT	1
Watts	U009APCQT	3/4 & 1
Watts	U009AQT	3/4 & 1
Watts	U009M1APCQT	1 1/2 & 2
Watts	U009M1AQT	1 1/2 & 2
Watts	U009M1PCQT	1 1/4 thru 2
Watts	U009M1QT	1 1/4 thru 2
Watts	U009M2APCQT	1, 1 1/2 2
Watts	U009M2AQT	1, 1 1/2, 2
Watts	U009M2PCQT	1, 1 1/2, 2
Watts	U009M2QT	3/4, 1, 1 1/2, 2
Watts	U009PCQT	1/2 thru 2
Watts	U009QT	1/2 thru 2
Watts	U009SSPCQT	3/4 thru 2
Watts	U009SSQT	3/4 thru 2
Watts	U909HWQT	3/4 & 1
Watts	U909QT	3/4 & 1
Watts	U919AQT	3/4 thru 2
Watts	U919QT	1 thru 2
Wilkins	375	1/2 Thru 10
Wilkins	475	2 1/2 thru 10
Wilkins	575	3/4, 1, 3, 4, 6
Wilkins	975	8 & 10
Wilkins	375A	2 1/2 thru 10
Wilkins	375AMS	2 1/2 thru 10
Wilkins	375AR	2 1/2 thru 10
Wilkins	375ARMS	2 1/2 thru 10
Wilkins	375ARW1	2 1/2 thru 10
Wilkins	375ARXL	2 1/2 thru 10
Wilkins	375AST	2 1/2 thru 10
Wilkins	375ASTMS	2 1/2 thru 10
Wilkins	375ASTR	2 1/2 thru 10

S.C. Department of Health and Environmental Control
2600 Bull Street, Columbia, SC 29201 (803) 898-3432 www.scdhec.gov

REDUCED PRESSURE PRINCIPLE ASSEMBLIES CONT.

Manufacturer	Model	Size
Watts	LF009M2PCQT	1 & 2
Watts	LF009M2QT	1 thru 2
Watts	LF009M3PCQT	3/4
Watts	LF009M3QT	3/4
Watts	LF009PCQT	1/2
Watts	LF009QT	1/2
Watts	LF909	2 1/2 thru 6
Watts	LF909M1	8 & 10
Watts	LF909M1PCQT	1 1/4 thru 2
Watts	LF909M1QT	1 1/4 thru 2
Watts	LF909PCQT	3/4 & 1
Watts	LF909QT	3/4 & 1
Watts	LF919AQT	3/4 thru 2
Watts	LF919QT	3/4 thru 2
Watts	LF919ZQT	3/4 thru 2
Watts	LFU919AQT	3/4 thru 2
Watts	LFU919QT	1 thru 2
Watts	Magnum 40	2 1/2, 3, 4, 8
Watts	Magnum 40G	2 1/2, 3, 4, 8
Watts	Magnum 40GX	6
Wilkins	475XLVMS	2 1/2 thru 10
Wilkins	575	2 1/2
Wilkins	575 (MOD-III)	1 1/4 thru 2
Wilkins	575A	3/4 & 1
Wilkins	575M10	10
Wilkins	575M8	8
Wilkins	975	3/4 thru 6
Wilkins	975A	3/4 thru 2
Wilkins	975BMS	2 1/2 thru 10
Wilkins	975MS	2 1/2 thru 10
Wilkins	975XL	1/4 thru 2
Wilkins	975XL2	1/4 thru 2
Wilkins	975XL2BMS	3/4 thru 2
Wilkins	975XL2MS	3/4 thru 2
Wilkins	975XL2SE	3/4 thru 2
Wilkins	975XL2SEU	3/4 thru 2

Manufacturer	Model	Size
Wilkins	375ASTRMS	2 1/2 thru 10
Wilkins	375ASTRW1	2 1/2 thru 10
Wilkins	375ASTW1	2 1/2 thru 10
Wilkins	375AW1	2 1/2 thru 10
Wilkins	375AXL	2 1/2 thru 10
Wilkins	375B	1/2 thru 2
Wilkins	375MS	2 1/2 thru 10
Wilkins	375ST	1/2 thru 1
Wilkins	375W1	2 1/2 thru 10
Wilkins	375XL	1/2 Thru 10
Wilkins	375XLB	1/2 thru 2
Wilkins	375XLMS	2 1/2 thru 10
Wilkins	475MS	2 1/2 thru 10
Wilkins	475ST	4 thru 10
Wilkins	475STR	4 thru 10
Wilkins	475V	2 1/2 thru 10
Wilkins	475VMS	2 1/2 thru 10
Wilkins	475XL	2 1/2 thru 10
Wilkins	475XLMS	2 1/2 thru 10
Wilkins	475XLV	2 1/2 thru 10
Wilkins	975XL2TCU	1/2 thru 2
Wilkins	975XL2U	3/4, 1, 1 1/2, 2
Wilkins	975XL2V	3/4 & 1
Wilkins	975XLBF	2
Wilkins	975XLBFSS	2
Wilkins	975XLBMS	3/4 thru 2
Wilkins	975XLD	3/4
Wilkins	975XLDTCU	3/4
Wilkins	975XLMS	3/4 thru 2
Wilkins	975XLSE	3/4 thru 2
Wilkins	975XLSEU	3/4 thru 2
Wilkins	975XLST	3/8 & 1/2
Wilkins	975XLTCU	1/2 thru 2
Wilkins	975XLU	3/4, 1, 1 1/2, 2
Wilkins	975XLV	3/4 & 1

S.C. Department of Health and Environmental Control
2600 Bull Street, Columbia, SC 29201 (803) 898-3432 www.scdhec.gov

SCDHEC

LIST OF APPROVED BACKFLOW PREVENTION ASSEMBLIES

PRESSURE VACUUM BREAKERS (PVB) & SPILL RESISTANT PRESSURE VACUUM BREAKERS (SVB)

PVB's & SVB'S are approved for use when protecting the potable water system from backsiphonage only when a health hazard or non-health hazard is involved. The term "health hazard" shall mean an actual or potential threat of contamination or pollution of a physical or toxic nature to the potable water system or the consumer's potable water system to such a degree of intensity that there would be a danger to health. It is very important to understand that the PVB/SVB is **not** designed for backpressure. Also, the PVB/SVB must be installed 12" above any downstream plumbing.

PRESSURE VACUUM BREAKERS:

Manufacturer	Model	Size
Ames	A200	3/4, 1, 1 1/2, 2
Apollo/Conbraco	4050302	1/2
Apollo/Conbraco	4050402	3/4
Apollo/Conbraco	4050502	1
Apollo/Conbraco	4050602	1 1/4
Apollo/Conbraco	4050702	1 1/2
Apollo/Conbraco	4050802	2
Apollo/Conbraco	PVB4A	1/2 thru 2
Apollo/Conbraco	PVB4V	1/2 thru 2
ARI	VB-501	1/2, 3/4, 1
Febco	765	1/2 thru 2
Febco	767-FR	1/2 thru 2
Febco	LF767FR	1/2 thru 2
Watts	800CMQT	1/2 thru 2
Watts	800M3QT	1/2 thru 2
Watts	800M4QT	1/2 thru 2
Watts	800MQT	1/2 & 3/4
Watts	800QT	3/4 thru 2
Watts	LF800M4FR	1/2 thru 2
Watts	LF800M4QT	1/2 thru 2
Wilkins	420	1/2, 3/4, 1
Wilkins	710	3/4 & 1
Wilkins	420XL	1/2, 3/4, 1
Wilkins	720A	1/2
Wilkins	720A	3/4 thru 2

SPILL RESISTANT VACUUM BREAKERS:

Manufacturer	Model	Size
Watts	008PCQT	3/8 thru 1
Watts	LF008PCQT	3/8 thru 1
Wilkins	460	3/8 thru 1
Wilkins	460XL	3/8 thru 1

S.C. Department of Health and Environmental Control
2600 Bull Street, Columbia, SC 29201 (803) 898-3432 www.scdhec.gov

BACKFLOW EQUIPMENT REPRESENTATIVES

Conbraco/Apollo Pro Marketing Mr. Jim Moore 110 Corporate Dr., Suite L Spartanburg, SC 29303 864-578-4334/843-340-4784 jmoore@promarketinginc.net	Febco/Flowmatic Lewis Marketing Mr. Bob Buddo 3601-C Woodpark Blvd. Charlotte, NC 28206 704-376-0262
Backflow Direct -Deringer Mr. Brad Scott 3290 Monier Circle #300 Rancho Cordova, CA 95742 916-760-4524 brad@backflowdirect.com	Watts & Ames Smith & Stevenson Mr. Joel Golmont / Mr. Mike Davis P.O. Box 240009 Charlotte, NC 28224 800-225-9825/704-525-3388
BAVCO Mr. Jim Purzycki 20435 South Susana Rd. Long Beach, CA 90810 800-458-3492/310-639-5231	Wilkins/Zurn Quality Marketing Mr. Chris Wall 1327 Wood Branch Dr, Suite J Charlotte, NC 28273 704-599-9407
ARI McKinney & Assoc. Mr. Michael McKinney 108 Brady Ct. Cary, NC 27511 919-467-9951	Cash-Acme SNIDER, INC. 3520 Westinghouse Blvd. Charlotte, NC 28273 USA (704) 588-0915
American Backflow Products Mr. Mark Inman 7580-A West Tennessee St. Tallahassee, FL 32303 800-575-9618/850-567-1814	

If you should have any questions concerning this list or need any assistance concerning backflow prevention or cross- connection control, please call or write:

Mr. Steve Fox, Cross Connection Control Program Coordinator
SCDHEC / Bureau of Water
2600 Bull Street
Columbia, SC 29201
Phone: 803-898-4426
Email: foxsc@dhec.sc.gov

SCDHEC backflow web page:
http://www.scdhec.gov/environment/WaterQuality/DrinkingWater/CrossConnectionControl/